EXAMINED BY： Bob Hu	EMERGING DISPLAY TECHNOLOGIES CORPORATION	FILE NO. CAS-0007207
		ISSUE：DEC.30, 2010
APPROVED BY: David Chang		TOTAL PAGE：16
		VERSION：4

CUSTOMER ACCEPTANCE SPECIFICATIONS

MODEL NO.:

EP0700MLE5
(GP)

FOR MESSRS:

_____

CUSTOMER'S APPROVAL

DATE：

_____

BY：

_____

EMERGING DISPLAY TECHNOLOGIES CORPORATION	MODEL NO.	VERSION	PAGE
	EP0700MLE5	4	0-1

RECORDS OF REVISION	DOC. FIRST ISSUE NOV.17, 2010

DATE	REVISED PAGE NO.	SUMMARY
NOV.24, 2010	5	8. OUTLINE DIMENSIONS MARK △1：MODIFY FPC SHIELDING TAPE DIMENSION
DEC.02. 2010	5	8. OUTLINE DIMENSIONS MARK △2：MODIFY T/P PROTECT FILM SEAT
DEC.30, 2010	5	8. OUTLINE DIMENSIONS MARK △3：CANCEL LOGO & INTERRELATE DIMENSION

TABLE OF CONTENTS

NO.	ITEM	PAGE
1.	GENERAL SPECIFICATIONS	1
2.	MECHANICAL SPECIFICATIONS	1
3.	ABSOLUTE MAXIMUM RATINGS	2
4.	ELECTRICAL CHARACTERISTICS	3
5.	TIMING CHARACTERISTICS	3 , 4
6.	OPTICAL CHARACTERISTICS	4
7.	MECHANICAL CHARACTERISTICS	4
8.	OUTLINE DIMENSIONS	5
9.	BLOCK DIAGRAM	6
10.	SIGNAL INTERFACES	6
11.	PROTOCOL	6 ~ 13
12.	INSPECTION CONDITIONS	14
13.	INSPECTION STANDARDS	15
14.	GENERAL RELIABLITY ASSURANCE	16
15.	CAUTION	16

1. GENERAL SPECIFICATIONS

1.1 GENERAL SPECIFICATIONS

THIS SPECIFICATION IS APPLIED TO PROJECTED CAPACITIVE TOUCH SCREEN MODULES, WHICH THE MODEL OF CUSTOMER IS SPECIFIED, TO STIPULATE THE QUALITY PERFORMANCE CONTROL.

1.2 APPLICATION NOTES FOR CONTROLLER/DRIVER

PLEASE REFER TO：

CYPRESS CY8CTMG120

1.3 MATERIAL SAFETY DESCRIPTION

ASSEMBLIES SHALL COMPLY WITH EDT GREEN PRODUCT (GP) REQUIREMENTS, INCLUDING PROHIBITED MATERIALS/COMPONENTS CONTAINING LEAD, MERCURY, CADMIUM, HEXAVALENT CHROMIUM, POLYBROMINATED BIPHENYLS (PBB), POLYBROMINATED DIPHENYL ETHERS (PBDE), POLYCHLORINATED BIPHENYLS (PCB) CATEGORY, POLYCHLORINATED NAPHTHALENE (PCN) CATEGORY, POLYCHLORINATED TERPHENYLS (PCT) CATEGORY, CHLORINATED PARAFFINS (CP) CATEGORY, TRIBUTHYL TIN CATEGORY / TRIPHENYL TIN CATEGORY, ASBESTOS, SPECIFIC AZO COMPOUNDS, FORMALDEHYDE, POLYVINYL CHLORIDE (PVC) AND PVC BLENDS, OTHER BROMINATED ORGANIC COMPOUNDS AND OTHER CHLORINATED ORGANIC COMPOUNDS.

2. MECHANICAL SPECIFICATIONS

(1) TOUCH PANEL SIZE	7.0 inch
(2) OUTER DIMENSION	121.09W * 189.199H * 1.94D(MAX.) mm (WITHOUT FPC & TAPE)
(3) EFFECTIVE AREA	86.92W * 155.08H mm
(4) ACTIVE AREA	86.52W * 154.683H mm
(5) INPUT TYPE	SINGLE TOUCH WITH INTERNAL GESTURE
(6) NUMBER OF TOUCH SENSOR	27*15 SENSORS
(7) RESOLUTION	800*480
(8) INTERFACE MODE	I2C

3. ABSOLUTE MAXIMUM RATINGS

3.1 ELECTRICAL ABSOLUTE MAXIMUM RATINGS.

PARAMETER	SYMBOL	MIN.	MAX.	UNIT	REMARK
POWER SUPPLY FOR DRIVER IC	VDD	-0.5	6	V	
DC INPUT VOLTAGE	VIN	VSS-0.5	VDD+0.5	V	
STATIC ELECTRICITY	—	—	100	V	NOTE (1)

NOTE (1) : TEST METHOD AND CONDITIONS：
CAPACITOR IS CHARGED UP TO 200 pF BY STATIC VOLTAGE, THEN CONNECT WITH DISPLAY MODULE INTERFACE PINS FOR DISCHARGE.

3.2 ENVIRONMENTAL ABSOLUTE MAXIMUM RATINGS

ITEM	OPERATING		STORAGE		REMARK
	MIN.	MAX.	MIN.	MAX.	
AMBIENT TEMPERATURE	- 2 0°C	7 0 °C	- 3 0 °C	8 0 °C	NOTE (1)
HUMIDITY	NOTE (2)		NOTE (2)		WITHOUT CONDENSATION
VIBRATION	—	2.45 m/s^2 (0.25 G)	—	11.76 m/s^2 (1.2 G)	10~100 Hz XYZ DIRECTIONS 1 Hr. EACH
SHOCK	—	29.4 m/s^2 (3 G)	—	490.0 m/s^2 (50 G)	10 mSECONDS XYZ DIRECTIONS 1 TIME EACH

NOTE (1) : Ta AT -30°C: WILL BE < 48hrs
80°C: WILL BE < 168hrs

NOTE (2) : Ta ≤ 60°C : 90%RH MAX. (96HRS MAX.)
Ta > 60°C : ABSOLUTE HUMIDITY MUST BE LOWER THAN 90%RH AT 60°C. (96HRS MAX.)

4. ELECTRICAL CHARACTERISTICS

Ta=25°C

ITEM		SYMBOL	VALUE			UNIT	REMARK
			MIN.	TYP.	MAX.		
POWER SUPPLY		VDD	3.1	3.3	3.6	V	
CURRENT DRIVER	ACTIVE (>40Hz)	IDD	—	13.0	19.1	mA	NOTE(1)
	LOW POWER (10Hz)	IDD	9	11.7	—		
	DEEP SLEEP (0Hz)	IDD	—	326	—	μA	
INTERFACE		I2C	SCL : 100KHz			Hz	
LINEARITY		—	±2			mm	
SNR		—	>5				
ESD		—	±2KV			V	

NOTE (1) : THE TEST CONDITION:VDD=3.3V , IN PULL-UP RESISTOR=10K ohm.

5. TIMING CHARACTERISTICS

5.1 AC CHARACTERISTICS OF THE I2C SDA AND SCL PINS

SYMBOL	DESCRIPTION	STANDARD MODE		UNITS
		MIN.	MAX.	
F_{SCLI2C}	SCL CLOCK FREQUENCY	0	100	KHz
$T_{HDSTAI2C}$	HOLD TIME (REPEATED) START CONDITION. AFTER THIS PERIOD, THE FIRST CLOCK PULSE IS GENERATED.	4.0	—	μs
T_{LOWI2C}	LOW PERIOD OF THE SCL CLOCK	4.7	—	μs
$T_{HIGHI2C}$	HIGH PERIOD OF THE SCL CLOCK	4.0	—	μs
$T_{SUSTAI2C}$	SET-UP TIME FOR A REPEATED START CONDITION	4.7	—	μs
$T_{HDDATI2C}$	DATA HOLD TIME	0	—	μs
$T_{SUDATI2C}$	DATA SET-UP TIME	250	—	μs
$T_{SUSTOI2C}$	SETUP TIME FOR STOP CONDITION	4.0	—	μs
T_{BUFI2C}	BUS FREE TIME BETWEEN A STOP AND START CONDITION	4.7	—	μs
T_{SPI2C}	PULSE WIDTH OF SPIKES ARE SUPPRESSED BY THE INPUT FILTER	—	—	ns

NOTE: A FAST-MODE I2C-BUS DEVICE MAY BE USED IN A STANDARD-MODE I2C-BUS SYSTEM, BUT TIMING REQUIREMENT $t_{SU;DAT} \geq 250$ ns MUST BE MET. THIS WILL AUTOMATICALLY BE THE CASE IF THE DEVICE DOES NOT STRETCH THE LOW PERIOD OF THE SCL SIGNAL. IF DEVICE DOES STRETCH THE LOW PERIOD OF SCL SIGNAL, IT MUST OUTPUT THE NEXT DATA BIT TO THE SDA LINE trmax + $t_{SU;DAT}$ = 1000 + 250 = 1250 ns (ACCORDING TO THE STANDARD-MODE I2C-BUS SPECIFICATION) BEFORE THE SCL LINE IS RELEASED.

5.2 I2C BUS TIMING

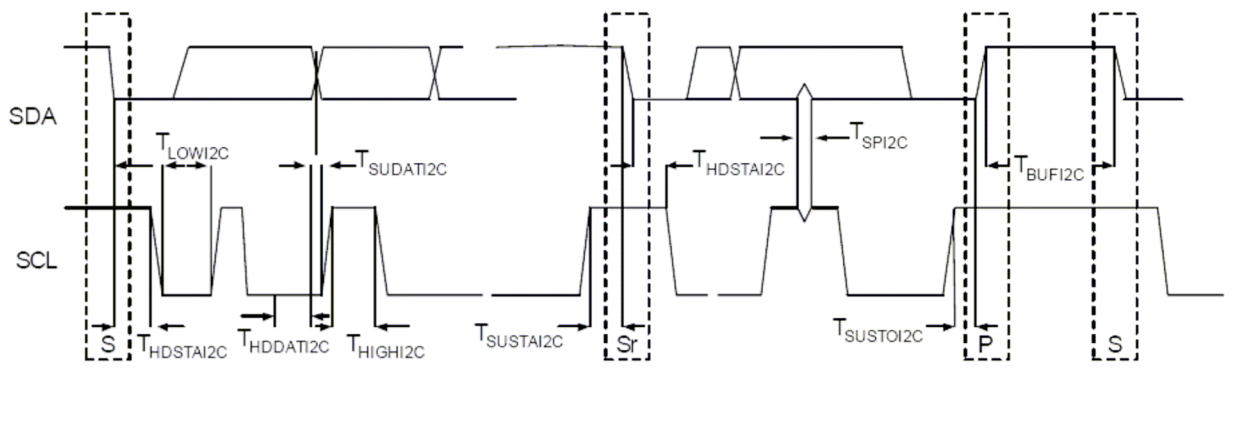

6. OPTICAL CHARACTERISTICS

ITEM	MIN.	TYP.	MAX.	UNIT	REMARK
CHROMATICITY[a*]	1				
CHROMATICITY{b*}	3				
TRANSPARENCY NOTE (1)	85	—	—	%	JIS-K7105
HAZE	1	—	—	%	JIS-K7105

NOTE (1) : OPTICAL MEASUREMENT SHOULD BE EXECUTED AFTER PANEL IS SECURED.
MEASUREMENT PROCESS SHOULD BE EXECUTED IN A STABLE, WINDLESS, AND DARK ROOM.
OPTICAL SPECIFICATIONS SHOULD BE MEASURED BY SPECTROPHOTOMETER.

7. MECHANICAL CHARACTERISTICS

7.1 HARDNESS

ITEM	DESCRIPTION
SURFACE HARDNESS	7H (min)

8. OUTLINE DIMENSIONS

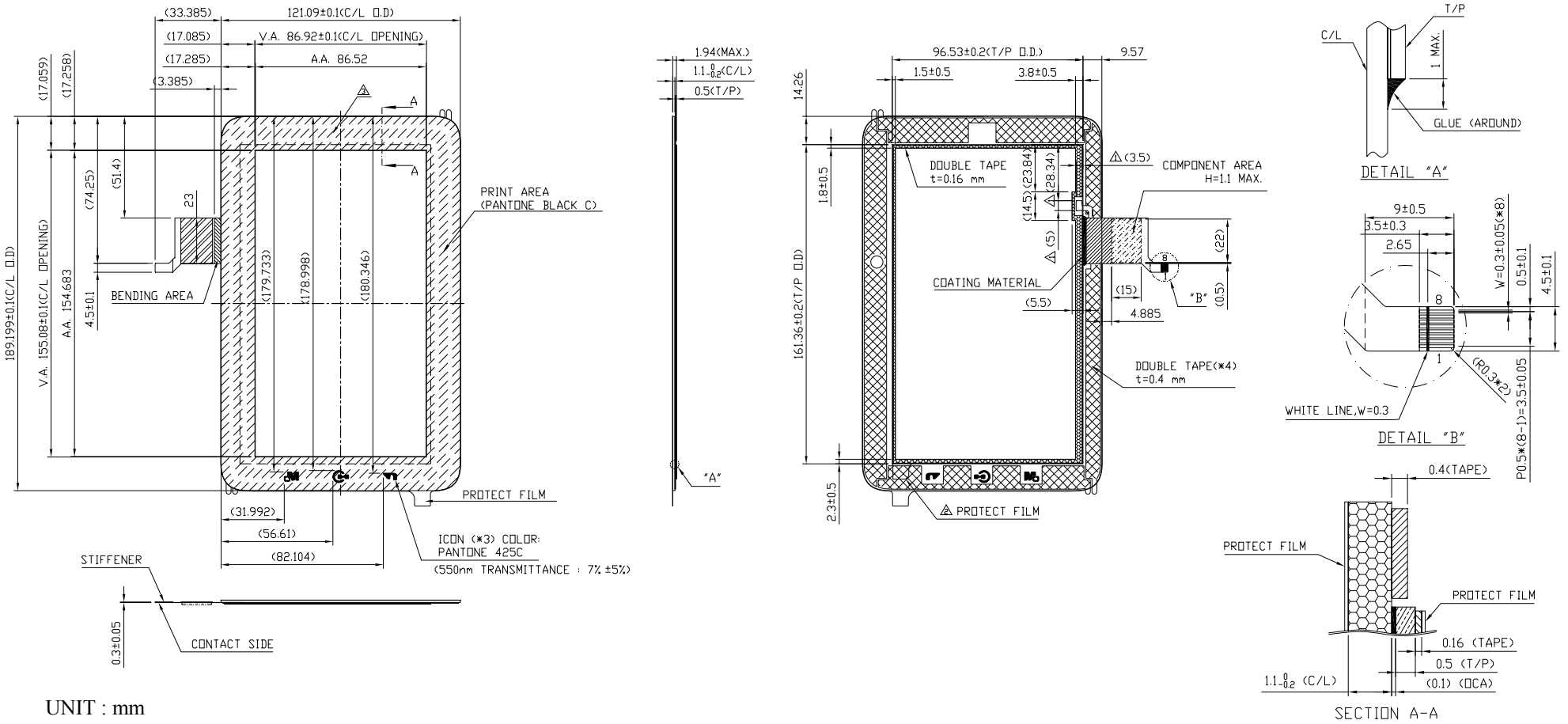

UNIT : mm
SCALE : NTS
NOT SPECIFIED TOLERANCE IS ±0.3mm
NOTE : MARK △3 MODIFY (NUMBER NOTE MODIFY VERSION)

9. BLOCK DIAGRAM

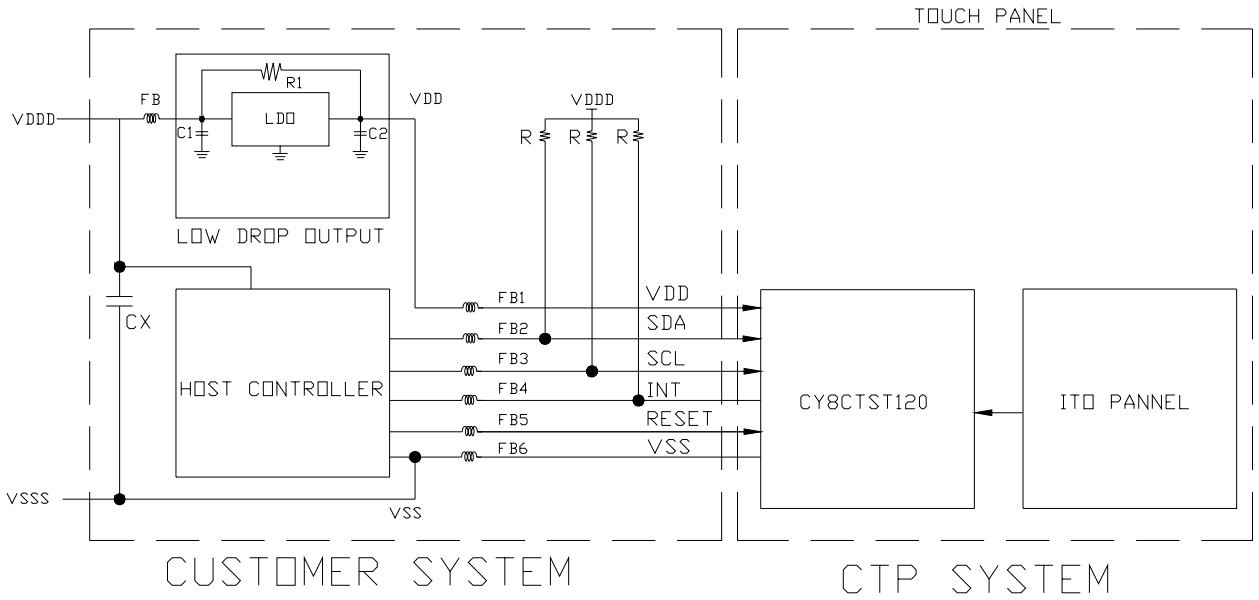

NOTE(1)：USE APPROPRIATE RESISTOR VALUE DURING HIGH SPEED SCL CLOCK. SUGGEST RESISTOR RECOMMENDATION: 1.0 K ohm.

NOTE(2)：POWER SUPPLY SHALL BE CLEAN AND NOISE FREE. ADDITIONAL FILTERING OR A SEPARATE LDO (LOW DROP OUT) REGULATOR CAN BE REQUIRED. C1 AND C2 CAPACITORS RECOMMENDATION: 4.7μF OR 10 μF LDO OUTPUT: MIN. 3.1V. VDDD MIN. 3.1V + Dropout Voltage of LDO

10. SIGNAL INTERFACES

PIN NO.	SYMBOL	I/O	FUNCTION
1	VDD	P	POWER VOLTAGE
2	GND	P	POWER GND
3	XRES	I	RESET (ACTIVE HIGH)
4	SCL	I	SCL OF I2C
5	SDA	I/O	SDA OF I2C
6	INT	O	INTERRUPT SIGNAL
7	D+	I/O	USB SIGNAL
8	D-	I/O	USB SIGNAL

11. PROTOCOL

11.1 CONFIGURATION

INTERFACE	I2C SLAVE
SLAVE ADDRESS	0x05H
TRANSPORT RATE	UP TO 100KHz(MAX.)
REPORT RATE	40~50 POINTS/SEC

11.2 DATA FORMAT

Address	Name	Definition	Attribute	Bit Description and Default Value								Note
				D7	D6	D5	D4	D3	D2	D1	D0	
0x03	FW_Version	Firmware Version	RO	VENDOR 1	VENDOR 0	SERIAL 5	SERIAL 4	SERIAL 3	SERIAL 2	SERIAL 1	SERIAL 0	
				TBD	TBD	TBD	TBD	TBD	TBD	TBD	TBD	
0x04	CSR	Control and Status	RW				AUTO_PWR	SCAN_EN		HOST_TYPE 1	HOST_TYPE 0	
				0	0	0	1	1	0	0	1	
0x05	Idle	Idle period in Low Power Mode	RW	IDLE 7	IDLE 6	IDLE 5	IDLE 4	IDLE 3	IDLE 2	IDLE 1	IDLE 0	Unit:1/512 sec Default:0.1 sec
				0	0	1	1	0	0	1	1	
0x06	Timeout	Timeout to Low Power Mode	RW	TIMEOUT 7	TIMEOUT 6	TIMEOUT 5	TIMEOUT 4	TIMEOUT 3	TIMEOUT 2	TIMEOUT 1	TIMEOUT 0	Unit:100 msec Default:5 sec
				0	0	1	1	0	0	1	0	
0x07	C_FLAG	Interrupt Clear Flag	RW	C_FLAG								
				1	0	0	0	0	0	0	1	
0X09	X1_H	High Byte of X1 Position	RO	X1_H 7	X1_H 6	X1_H 5	X1_H 4	X1_H 3	X1_H 2	X1_H 1	X1_H 0	
				0	0	0	0	0	0	0	0	
0X0A	X1_L	Low Byte of X1 Position	RO	X1_L 7	X1_L 6	X1_L 5	X1_L 4	X1_L 3	X1_L 2	X1_L 1	X1_L 0	
				0	0	0	0	0	0	0	0	
0X0B	Y1_H	High Byte of Y1 Position	RO	Y1_H 7	Y1_H 6	Y1_H 5	Y1_H 4	Y1_H 3	Y1_H 2	Y1_H 1	Y1_H 0	
				0	0	0	0	0	0	0	0	
0x0C	Y1_L	Low Byte of Y1 Position	RO	Y1_L 7	Y1_L 6	Y1_L 5	Y1_L 4	Y1_L 3	Y1_L 2	Y1_L 1	Y1_L 0	
				0	0	0	0	0	0	0	0	
0x0D	X2_H	High Byte of X2 Position	RO	X2_H 7	X2_H 6	X2_H 5	X2_H 4	X2_H 3	X2_H 2	X2_H 1	X2_H 0	
				0	0	0	0	0	0	0	0	
0x0E	X2_L	Low Byte of X2 Position	RO	X2_L 7	X2_L 6	X2_L 5	X2_L 4	X2_L 3	X2_L 2	X2_L 1	X2_L 0	
				0	0	0	0	0	0	0	0	
0x0F	Y2_H	High Byte of Y2 Position	RO	Y2_H 7	Y2_H 6	Y2_H 5	Y2_H 4	Y2_H 3	Y2_H 2	Y2_H 1	Y2_H 0	
				0	0	0	0	0	0	0	0	
0x10	Y2_L	Low Byte of Y2 Position	RO	Y2_L 7	Y2_L 6	Y2_L 5	Y2_L 4	Y2_L 3	Y2_L 2	Y2_L 1	Y2_L 0	
				0	0	0	0	0	0	0	0	
0x11	Finger	Detected finger number	RO							Finger 1	Finger 0	
				0	0	0	0	0	0	0	0	
0x12	Gesture	Interpreted Gesture	RO	Gesture 7	Gesture 6	Gesture 5	Gesture 4	Gesture 3	Gesture 2	Gesture 1	Gesture 0	
				0	0	0	0	0	0	0	0	

Address	Name	Definition	Attribute	Bit Description and Default Value								Note
				D7	D6	D5	D4	D3	D2	D1	D0	
0x17	Diff[X1]	Difference value sensor	RO	Diff[X1] 7	Diff[X1] 6	Diff[X1] 5	Diff[X1] 4	Diff[X1] 3	Diff[X1] 2	Diff[X1] 1	Diff[X1] 0	
				0	0	0	0	0	0	0	0	
0x18	Diff[X2]	Difference value sensor	RO	Diff[X2] 7	Diff[X2] 6	Diff[X2] 5	Diff[X2] 4	Diff[X2] 3	Diff[X2] 2	Diff[X2] 1	Diff[X2] 0	
				0	0	0	0	0	0	0	0	
⋮	⋮	⋮	⋮	⋮	⋮	⋮	⋮	⋮	⋮	⋮	⋮	
0x31	Diff[X27]	Difference value sensor	RO	Diff[X27] 7	Diff[X27] 6	Diff[X27] 5	Diff[X27] 4	Diff[X27] 3	Diff[X27] 2	Diff[X27] 1	Diff[X27] 0	
				0	0	0	0	0	0	0	0	
0x32	Diff[Y1]	Difference value sensor	RO	Diff[Y1] 7	Diff[Y1] 6	Diff[Y1] 5	Diff[Y1] 4	Diff[Y1] 3	Diff[Y1] 2	Diff[Y1] 1	Diff[Y1] 0	
				0	0	0	0	0	0	0	0	
0x33	Diff[Y2]	Difference value sensor	RO	Diff[Y2] 7	Diff[Y2] 6	Diff[Y2] 5	Diff[Y2] 4	Diff[Y2] 3	Diff[Y2] 2	Diff[Y2] 1	Diff[Y2] 0	
				0	0	0	0	0	0	0	0	
⋮	⋮	⋮	⋮	⋮	⋮	⋮	⋮	⋮	⋮	⋮	⋮	
0x40	Diff[Y15]	Difference value sensor	RO	Diff[Y27] 7	Diff[Y27] 6	Diff[Y27] 5	Diff[Y27] 4	Diff[Y27] 3	Diff[Y27] 2	Diff[Y27] 1	Diff[Y27] 0	

11.2.1 FIRMWARE VERSION (ADDRESS 0x03)

Address	Name	Definition	Attribute	Bit Description and Default Value								Note
				D7	D6	D5	D4	D3	D2	D1	D0	
0x03	FW_Version	Firmware Version	RO	VENDOR 1	VENDOR 0	SERIAL 5	SERIAL 4	SERIAL 3	SERIAL 2	SERIAL 1	SERIAL 0	
				TBD	TBD	TBD	TBD	TBD	TBD	TBD	TBD	

WE HAVE TWO FUNCTIONS IN THIS REGISTER. ONE IS VENDOR CODE AND ANOTHER IS SERIAL NUMBER. REGARDING TO DEFINITION IS AS FOLLOWED:

- VENDOR (VENDOR CODE):
  00b → RESERVE
  01b → RESERVE
  10b → EDT
  11b → RESERVE

- SERIAL (SERIAL NUMBER): DEFINE IT BY VENDOR, BUT IT NEEDS PROVIDE REV. LIST.

11.2.2 CSR - CONTROL AND STATUS REGISTER (ADDRESS 0x04)

Address	Name	Definition	Attribute	Bit Description and Default Value								Note
				D7	D6	D5	D4	D3	D2	D1	D0	
0x04	CSR	Control and Status	RW				AUTO_PWR	SCAN_EN		HOST_TYPE 1	HOST_TYPE 0	
				0	0	0	1	1	0	0	1	

- AUTO_PWR (AUTO LOW POWER ENABLE): HOST (CUSTOMER TYPE) CAN LET PSOC AUTOMATICALLY ENTER LOW POWER MODE BY SETTING THIS BIT. IF THIS FUNCTION IS DISABLED, IT MEANS THE SYSTEM ALWAYS OPERATES IN ACTIVE MODE.
  0b→ DISABLE
  1b→ ENABLE
- SCAN_EN (SCAN ENABLE): HOST NEEDS TO SET THIS BIT TO START SCANNING. IT SHOULD BE NOTICED THAT THIS BIT SHOULD NOT BE SET UNTIL ALL OTHER PARAMETERS ARE CONFIGURED.
  0b→ DISABLE
  1b→ ENABLE
- HOST_TYPE (HOST TYPE): HOST NEEDS TO SET THIS BIT TO START SCANNING. IT SHOULD BE NOTICED THAT THIS BIT SHOULD NOT BE SET UNTIL ALL OTHER PARAMETERS ARE CONFIGURED.
  00b → RESERVE
  01b → RESERVE
  10b → TEST GUI
  11b → RESERVE

11.2.3 LOW POWER CONFIGURE REGISTER (ADDRESS 0x05, 0x06)

Address	Name	Definition	Attribute	Bit Description and Default Value								Note
				D7	D6	D5	D4	D3	D2	D1	D0	
0x05	Idle	Idle period in Low Power Mode	RW	IDLE 7	IDLE 6	IDLE 5	IDLE 4	IDLE 3	IDLE 2	IDLE 1	IDLE 0	Unit:1/512 sec Default:0.1 sec
				0	0	1	1	0	0	1	1	
0x06	Timeout	Expired Timeout to Low Power Mode	RW	TIMEOUT 7	TIMEOUT 6	TIMEOUT 5	TIMEOUT 4	TIMEOUT 3	TIMEOUT 2	TIMEOUT 1	TIMEOUT 0	Unit:100 msec Default:5 sec
				0	0	1	1	0	0	1	0	

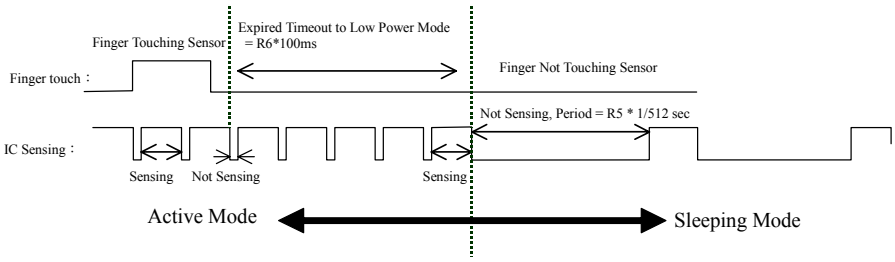

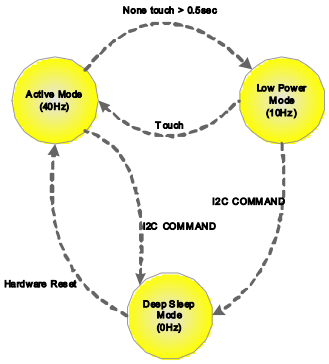

11.2.4 CLEAR FLAG (ADDRESS 0x07)

Address	Name	Definition	Attribute	Bit Description and Default Value								Note
				D7	D6	D5	D4	D3	D2	D1	D0	
0x07	C_FLAG	Interrupt Clear Flag	RW	C_FLAG								
				1	0	0	0	0	0	0	1	

THERE THREE CONDITIONS THIS FLAG WILL SET BY PSOC AND THE INT PIN WOULD BE ACTIVE LOW:

1. THE SYSTEM IS READY AFTER POWER ON.
2. THE SYSTEM IS READY AFTER RESET.
3. TOUCH THE SCREEN

WHEN THE FLAG IS SET, USER NEEDS TO RESET THIS FLAG AND THEN THE INT PIN WOULD BE PULL-UP. AFTER SCANNING, WHEN INT IS ACTIVE LOW, IT MEANS THERE ARE SOME NEW DATA IS UPDATED AND THE SCANNING IS STOP. USER NEEDS TO READ OUT THE DATA AND THEN RESET THE FLAG TO ENABLE THE NEXT SCAN.

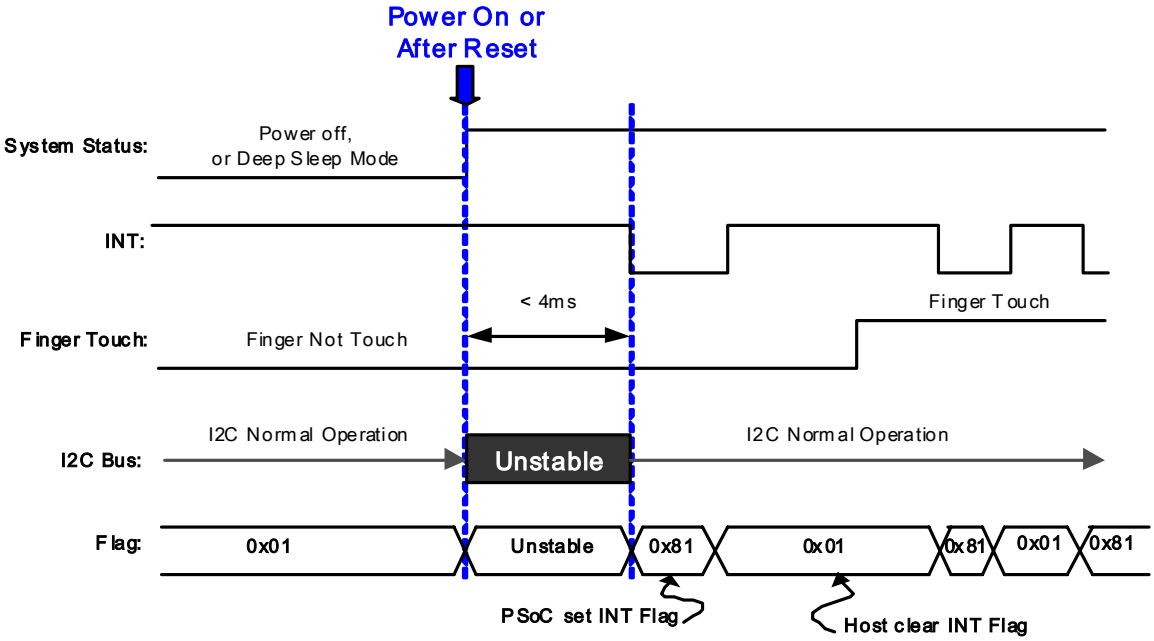

11.2.5 COORDINATE REGISTER (ADDRESS 0x09 ~ 0x11)

Address	Name	Definition	Attribute	Bit Description and Default Value								Note
				D7	D6	D5	D4	D3	D2	D1	D0	
0X09	X1_H	High Byte of X1 Position	RO	X1_H 7	X1_H 6	X1_H 5	X1_H 4	X1_H 3	X1_H 2	X1_H 1	X1_H 0	
				0	0	0	0	0	0	0	0	
0X0A	X1_L	Low Byte of X1 Position	RO	X1_L 7	X1_L 6	X1_L 5	X1_L 4	X1_L 3	X1_L 2	X1_L 1	X1_L 0	
				0	0	0	0	0	0	0	0	
0X0B	Y1_H	High Byte of Y1 Position	RO	Y1_H 7	Y1_H 6	Y1_H 5	Y1_H 4	Y1_H 3	Y1_H 2	Y1_H 1	Y1_H 0	
				0	0	0	0	0	0	0	0	
0x0C	Y1_L	Low Byte of Y1 Position	RO	Y1_L 7	Y1_L 6	Y1_L 5	Y1_L 4	Y1_L 3	Y1_L 2	Y1_L 1	Y1_L 0	
				0	0	0	0	0	0	0	0	
0x0D	X2_H	High Byte of X2 Position	RO	X2_H 7	X2_H 6	X2_H 5	X2_H 4	X2_H 3	X2_H 2	X2_H 1	X2_H 0	
				0	0	0	0	0	0	0	0	
0x0E	X2_L	Low Byte of X2 Position	RO	X2_L 7	X2_L 6	X2_L 5	X2_L 4	X2_L 3	X2_L 2	X2_L 1	X2_L 0	
				0	0	0	0	0	0	0	0	
0x0F	Y2_H	High Byte of Y2 Position	RO	Y2_H 7	Y2_H 6	Y2_H 5	Y2_H 4	Y2_H 3	Y2_H 2	Y2_H 1	Y2_H 0	
				0	0	0	0	0	0	0	0	
0x10	Y2_L	Low Byte of Y2 Position	RO	Y2_L 7	Y2_L 6	Y2_L 5	Y2_L 4	Y2_L 3	Y2_L 2	Y2_L 1	Y2_L 0	
				0	0	0	0	0	0	0	0	
0x11	Finger	Detected finger number	RO							Finger 1	Finger 0	
				0	0	0	0	0	0	0	0	

- X1 POSITION: 0~480. NO TOUCH DETECTED IS PREVIOUS VALUE.
- Y1 POSITION: 0~800. NO TOUCH DETECTED IS PREVIOUS VALUE.
- X2 POSITION: 0~480. NO TOUCH DETECTED IS PREVIOUS VALUE.
- Y2 POSITION: 0~800. NO TOUCH DETECTED IS PREVIOUS VALUE.
- FINGER (FINGER NUMBER): TOUCH CONTROLLER WILL REPORT THE TOUCH NUMBER, AND HOST USE THIS REGISTER TO JUDGE TOUCH OR NON-TOUCH.

00b → NON-TOUCH
01b → ONE FINGER TOUCH
10b → TWO FINGERS TOUCH
11b → RESERVE

TMG120 CAN ONLY SUPPORT TWO FINGERS GESTURE TOUCH. WHEN TWO TOUCH, THE COORDINATE WOULD BE UP RIGHT POINT AND DOWN LEFT POINT.

11.2.6 GESTURE REGISTER (ADDRESS 0x12)

Address	Name	Definition	Attribute	Bit Description and Default Value								Note
				D7	D6	D5	D4	D3	D2	D1	D0	
0x12	Gesture	Interpreted Gesture	RO	Gesture 7	Gesture 6	Gesture 5	Gesture 4	Gesture 3	Gesture 2	Gesture 1	Gesture 0	
				0	0	0	0	0	0	0	0	

Gesture	Code	Remark
No Gesture	0x00	
Single-Touch Pan-Up	0x01	
Single-Touch Pan-Right	0x02	
Single-Touch Pan-Down	0x03	
Single-Touch Pan-Left	0x04	
Single-Touch Rotate-CW	0x05	Option
Single-Touch Rotate-CCW	0x06	Option
Single-Touch Click	0x07	
Multi-Touch Pan-Up	0x08	
Multi-Touch Pan-Right	0x09	
Multi-Touch Pan-Down	0x0A	
Multi-Touch Pan-Left	0x0B	
Zoom In	0x0C	
Zoom Out	0x0D	
Single-Touch Double Click	0x0E	
Multi-Touch Click	0x0F	

11.2.7 DIFFERENCE VALUE REGISTER (ADDRESS 0x17 ~ 0x40)

Address	Name	Definition	Attribute	Bit Description and Default Value								Note
				D7	D6	D5	D4	D3	D2	D1	D0	
0x17	Diff[X1]	Difference value sensor	RO	Diff[X1] 7	Diff[X1] 6	Diff[X1] 5	Diff[X1] 4	Diff[X1] 3	Diff[X1] 2	Diff[X1] 1	Diff[X1] 0	
				0	0	0	0	0	0	0	0	
0x18	Diff[X2]	Difference value sensor	RO	Diff[X2] 7	Diff[X2] 6	Diff[X2] 5	Diff[X2] 4	Diff[X2] 3	Diff[X2] 2	Diff[X2] 1	Diff[X2] 0	
				0	0	0	0	0	0	0	0	
⋮	⋮	⋮	⋮	⋮	⋮	⋮	⋮	⋮	⋮	⋮	⋮	
0x31	Diff[X27]	Difference value sensor	RO	Diff[X27] 7	Diff[X27] 6	Diff[X27] 5	Diff[X27] 4	Diff[X27] 3	Diff[X27] 2	Diff[X27] 1	Diff[X27] 0	
				0	0	0	0	0	0	0	0	
0x32	Diff[Y1]	Difference value sensor	RO	Diff[Y1] 7	Diff[Y1] 6	Diff[Y1] 5	Diff[Y1] 4	Diff[Y1] 3	Diff[Y1] 2	Diff[Y1] 1	Diff[Y1] 0	
				0	0	0	0	0	0	0	0	
0x33	Diff[Y2]	Difference value sensor	RO	Diff[Y2] 7	Diff[Y2] 6	Diff[Y2] 5	Diff[Y2] 4	Diff[Y2] 3	Diff[Y2] 2	Diff[Y2] 1	Diff[Y2] 0	
				0	0	0	0	0	0	0	0	
⋮	⋮	⋮	⋮	⋮	⋮	⋮	⋮	⋮	⋮	⋮	⋮	
0x40	Diff[Y15]	Difference value sensor	RO	Diff[Y27] 7	Diff[Y27] 6	Diff[Y27] 5	Diff[Y27] 4	Diff[Y27] 3	Diff[Y27] 2	Diff[Y27] 1	Diff[Y27] 0	
				0	0	0	0	0	0	0	0	

TOUCH CONTROLLER CAN SUPPORT DIFFERENCE VALUES DEBUG MODE FOR SYSTEM VERIFICATION.

11.3 DEEP SLEEP MODE

CYPRESS SUPPORTS DEEP SLEEP MODE. DEEP SLEEP MODE CAN BE SETUP BY CONFIGURING AUTO LOW POWER TIMEOUT R6 AS “0x00” BEFORE STARTING SCANNING. THE FOLLOWINGS ARE DEEP SLEEP AND WAKEUP SEQUENCE.

SLEEP SEQUENCE

1. ISSUE HW RESET
2. CONFIGURE LOW POWER TIMEOUT R6 AS “0x00”
3. SET Auto_Pwr AT CSR
4. SET Scan_En AT CSR TO START SCAN
5. PSOC IS NOW DEEP SLEEPING

WAKEUP SEQUENCE

1. ISSUE HW RESET
2. PSoC IS NOW WAKING UP

12. INSPECTION CONDITIONS

12.1 ENVIRONMENTAL CONDITIONS

(1) OBSERVATION DISTANCE：30±5cm

(2) VIEWING ANGLE：±45°

(3) BACKGROUND COLOR：BLACK

(4)

AMBIENT TEMPERATURE	20°C ~ 30°C
AMBIENT HUMIDITY	55±10%RH
AMBIENT ILLUMINATION (FLUORESCENT LIGHT)	800~1000 LUX

VIEWING ANGLE SHOULD BE SMALLER THAN 45°

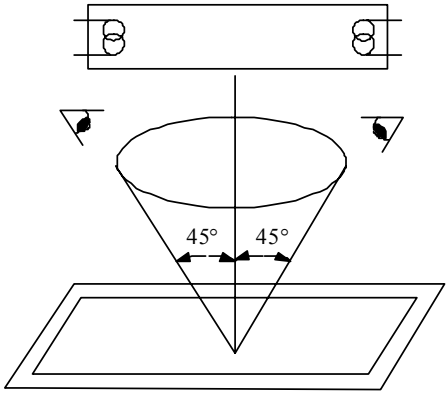

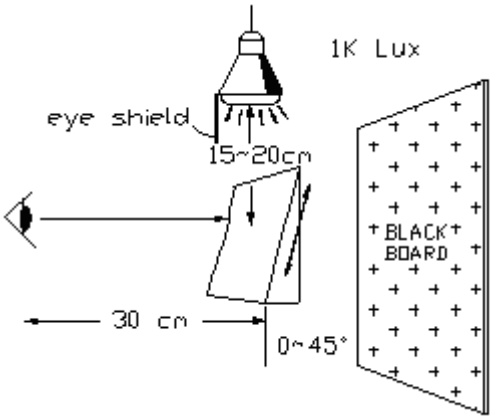

LINE OF SIGHT FOR INSPECTION SHALL BE WITHIN THE HALF SECTION OF THE VIEWING CONE GENERATED BY LINE SEGMENT 45° WITH RESPECTS TO THE VERTICAL AXIS FROM CENTER VERTEX OF LCD, THE CONE AXIS MUST BE PERPENDICULAR NORMAL TO LCD SURFACE AND PASSES THROUGH THE FLUORESCENT LAMP.

A AREA：VIEWING AREA
B AREA：OUT OF VIEWING AREA (OUTSIDE VIEWING AREA)

12.2 INSPECTION PLAN

FOLLOW MIL-STD-105E, NORMAL, LEVEL II, AQL=1.0

13. INSPECTION STANDARDS

<table>
<tr><th>INSPECTION ITEMS</th><th>CRITERIA</th><th>REMARK</th></tr>
<tr><td>BLACK/WHITE SPOT</td><td>THE FOLLOWING BLACK/WHITE SPOT ARE WITHIN THE VIEWING AREA. AVERAGE DIAMETER：D (mm)
<table><tr><th>SIZE D</th><th>PERMISSIBLE NO.</th></tr><tr><td>D≤0.1mm</td><td>IGNORE</td></tr><tr><td>0.1mm<D≤0.5mm</td><td>5</td></tr><tr><td>D>0.5 mm</td><td>0</td></tr></table>NOTE (1) : THE DISTANCE BETWEEN DOT EDFECTS SHOULD BE MORE THAN 10mm APART.</td><td> 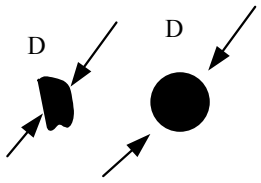
</td></tr>
<tr><td>SCRATCH</td><td>THE FOLLOWING BLACK LINE, WHITE LINE IS WITHIN THE VIEWING AREA. WIDTH：W (mm) , LENGH : L (mm)
<table><tr><th>SIZE W & L</th><th>PERMISSIBLE NO.</th></tr><tr><td>W≤0.05mm</td><td>IGNORE</td></tr><tr><td>0.05mm<W≤0.07mm, L≤5mm</td><td>1</td></tr><tr><td>W>0.07mm</td><td>0</td></tr></table></td><td> 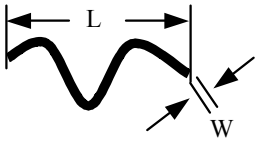
</td></tr>
<tr><td>LINEAR TYPE / FOREIGN FIBER</td><td>THE FOLLOWING BLACK LINE, WHITE LINE IS WITHIN THE VIEWING AREA. WIDTH：W (mm) , LENGH : L (mm)
<table><tr><th>SIZE W & L</th><th>PERMISSIBLE NO.</th></tr><tr><td>W≤0.05mm</td><td>IGNORE</td></tr><tr><td>0.05mm<W≤0.07mm, L≤5mm</td><td>1</td></tr><tr><td>W>0.07mm</td><td>0</td></tr></table></td><td> 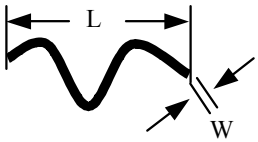
</td></tr>
<tr><td>BUBBLE / DENT</td><td>BUBBLES WITHIN VIEWING AREA. AVERAGE DIAMETER：D (mm)
<table><tr><th>SIZE D</th><th>PERMISSIBLE NO.</th></tr><tr><td>W≤0.2mm</td><td>IGNORE</td></tr><tr><td>0.2mm<W≤0.3mm</td><td>3</td></tr><tr><td>0.3mm<W≤0.5mm</td><td>1</td></tr><tr><td>W>0.5mm</td><td>0</td></tr></table></td><td> 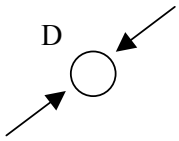
</td></tr>
<tr><td>CRACK</td><td><table><tr><td>CORNER</td><td>X ≤ 3mm 、Y ≤ 3mm、Z ≤ t
(t : thickness)</td></tr><tr><td>EDGE</td><td>X≤6 mm、Y≤ 1mm、Z ≤t mm
(t : thickness)</td></tr></table></td><td> 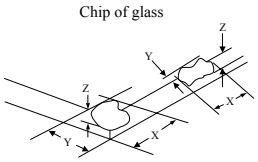
</td></tr>
</table>

NOTE:

1. FOR ANY SPOTS OR LINES, WHICH ARE NOT OBSERVED UNDER APPROPRIATE PANEL OPERATING CONDITION ARE DEEMED ACCEPTABLE.
2. THE FOREIGN MATERIALS THAT CAN BE BLOWN OUT BY AIR AND REMOVED BY WET CLEANING ARE NOT REGARDED AS DEFECTS.

14. GENERAL RELIABLITY ASSURANCE

NO	ITEM		CONDITIONS	TIME PERIOD	REMARK
1	HIGH TEMPERATURE STORAGE		80 ± 2 °C 15% RH	240HRS	2HRS LEFT ALONE AT NORMAL TEMP
2	LOW TEMPERATURE STORAGE		-30 ± 2 °C <15% RH	240HRS	4HRS LEFT ALONE AT NORMAL TEMP
3	HIGH TEMPERATURE OPERATING		70 ± 2 °C	240HRS	AS SAME AS (2)
4	LOW TEMPERATURE OPERATING		-20 ± 2 °C	240HRS	AS SAME AS (2)
5	HIGH TEMPERATURE HUMIDITY STORAGE		60 ± 2 °C 90 % RH	240HRS	AS SAME AS (2)
6	THERMAL SHOCK		-30°C , 70°C 0.5H 0.5H	TRANSIT/3MIN 50 CYCLES	
7	FPC BENDING TEST		0° TO 135°	RIGHT 90°INVERSE 45° POISE 500G, 10 CYCLES	WITHOUT FUNCTION ISSUE
8	ESD	NON-OPERATING	AIR±12KV CONTACT±8KV	—	ONLY TP MODULE (3)
		OPERATING	AIR±8KV CONTACT±6KV		

NOTE (1) : AFTER RELIABILITY TEST COMPLETION, THE FOLLOWINGS ARE VERIFIED：
1. WHETHER TOUCH PANEL WORKS NORMALLY UNDER NORMAL TEMPERATURE ENVIRONMENT.
2. VARIATION ON MODULE APPEARANCE.

NOTE (2) : 1. CONDUCT EXAMINATION AND MEASUREMENT UNDER THE FOLLOWING CONDITIONS, UNLESS SPECIFIED OTHERWISE.
TEMPERATURE：25 ± 5°C
HUMIDITY：55± 10%RH
ATMOSPHERIC PRESSURE: 96±10KPA
2. DATA FOR ALL MEASUREMENTS SHALL ONLY BE RECORDED ONCE SPECIMENS HAVE ATTAINED TEMPERATURE STABILITY.

NOTE (3) : THE STATED VALUE ARE BASED ON EDT TESTING CRITERIA AND EVALUATION EQUIPMENTS AS BENCHMARK. SPECIFIC ESD PERFORMANCE WILL BE BASED ON APPLICATION CONDITION AND CUSTOMER'S UNIT STRUCTURE.

15. CAUTION

CLEANING

(1) NEUTRAL DETERGENT OR ACETONE ON A CLEAN SOFT CLOTH ON PANEL SURFACE IS ALLOWED.

(2) AVOID USAGE OF CHEMICAL SOLVENT OF ANY KIND, INCLUDING BOTH ACIDIC AND ALKALI BASED SOLUTIONS.